KITO Armaturen GmbH

Type sheet

Deflagration and endurance burning proof pressure relief valve

KITO® DS/KS-IIB1-…

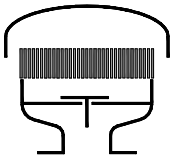

Application

As an end-of-line flame arrester, explosion and endurance burning proof for all inflammable liquids and vapors of explo-sion group IIB1 and also for alcohols with a maximum experimental safe gap (MESG) ≥ 0.85 mm and an maximum operating temperature of 60 °C. Safety valve for out breathing pipes of storage tanks as a protection against overpressure. By appropriate pressure adjustment the gasification losses of the storage product are prevented or strongly limited. Usually mounted on the top of the tank in conjunction with a vacuum relief valve (see KITO® VS/KS-IIB3-… (type sheet D 11 N)). An explosion proof condensate drain is also available for this model at extra cost.

With additional examination and approval, applicable also for alcohols (ethanol, methanol...)

Dimensions (mm) and settings (mbar)

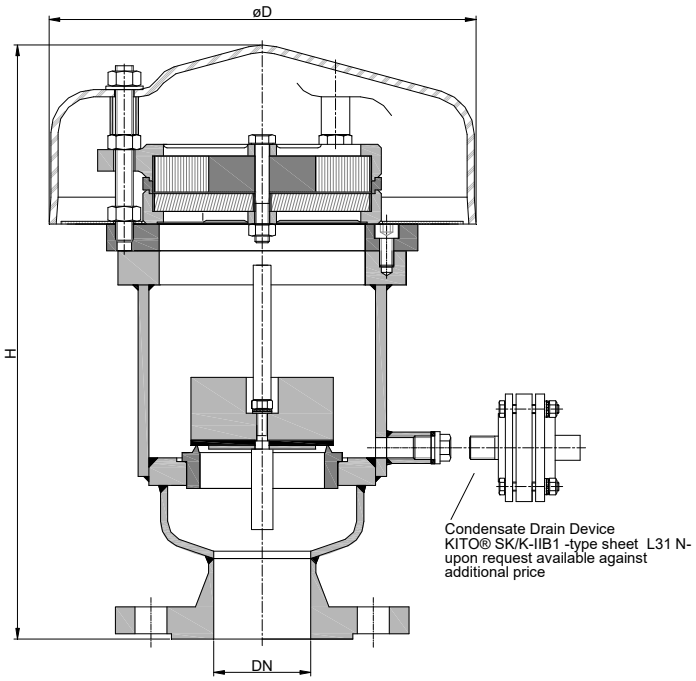

DN		D	H		~ kg	setting		
DIN	ASME		DIN	ASME		min. - max. *(load weight from PE)*	min. - max.	min. - max. *(with housing extension)*
25 PN 40	1“	240	324	340		3,1 - 10.4	10,5 - 200	-
50 PN 16	2“		332	351		2 - 7.4	7,5 - 100	> 100 - 200
80 PN 16	3“		383	403		2 - 7.9	8 - 105	> 105 - 200
100 PN 16	4“		381	406		2 - 7.9	8 - 95	> 95 - 200

Indicated weights are understood without weight load and refer to the standard design
Higher settings on request !

Example for order

KITO® DS/KS-IIB1-50
(design with flange connection DN 50 PN 16)

Type examination certificate to EN ISO 16852 and CE-marking in accordance to ATEX-Directive 2014/34/EU

KITO Armaturen GmbH
Grotrian-Steinweg-Str. 1c
D-38112 Braunschweig
VAT Reg.No DE812887561
+49 (0) 531 23000-0
+49 (0) 531 23000-10
www.kito.de
info@kito.de

Type sheet
Deflagration and endurance burning proof pressure relief valve
KITO® DS/KS-IIB1-…

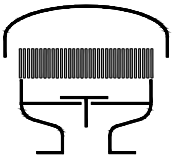

Design

	standard	optionally
housing	steel	stainless steel mat. no. 1.4571
valve seat, valve spindle	stainless steel mat. no. 1.4571	
load weight	stainless steel mat. no. 1.4571	PE
valve sealing	NBR	Viton, PTFE, EPDM, metal sealing
	≥ 100 mbar only PTFE or metal sealing	
KITO®-flame arrester element	completely interchangeable	
KITO®-casing / KITO®-grid	stainless steel mat. no. 1.4408 / 1.4310	stainless steel mat. no. 1.4408 / 1.4571
weather hood	PMMA	
protective screen	PA6	
flange connection	EN 1092-1 type B1	ASME B16.5 Class 150 RF

Performance curves

Flow capacity V based on air of a density ρ = 1.29 kg/m³ at T = 273 K and atmospheric pressure p = 1.013 mbar. For other gases the flow can be approximately calculated by

$$\dot{V}_{40\%} = \dot{V}_b \cdot \sqrt{\frac{\rho_b}{1.29}} \qquad or \qquad \dot{V}_b = \dot{V}_{40\%} \cdot \sqrt{\frac{1.29}{\rho_b}}$$

The indicated flow rates will be reached by an accumulation of 40% above valve's setting (see DIN 4119).
If the allowable overpressure is less 40%, please consult der factory for the corrected volume flow.

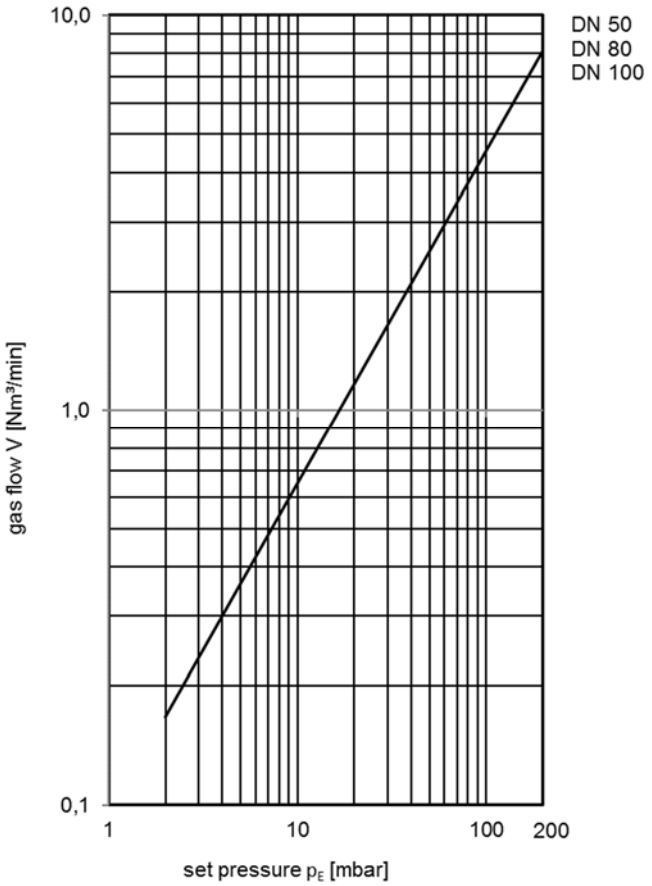

KITO Armaturen GmbH
Grotrian-Steinweg-Str. 1c
D-38112 Braunschweig
VAT Reg.No DE812887561
+49 (0) 531 23000-0
+49 (0) 531 23000-10
www.kito.de
info@kito.de